2020

Squannacook River Rail Trail Guidelines and Specifications for Construction Contractors

Squannacook Greenways Inc.

8/13/2020

TABLE OF CONTENTS

LIST OF FIGURES

PLANS

Due to large file size, some of the following plans are not included in this document and may be downloaded from the URLs provided.

A. Map of the Overall Rail Trail Route (http://www.sqgw.org/engineering_plans.html)
B. Typical Cross-Section (http://www.sqgw.org/engineering_plans.html)
C. Slope Stabilization (http://www.sqgw.org/engineering_plans.html)
D. Wetland Replication (http://www.sqgw.org/townsend_wetland_maps.html)
E. Old Meetinghouse Road Staging Area (http://www.sqgw.org/engineering_plans.html)
F. Valuation maps (http://www.sqgw.org/valuation_maps.html)
G. Wetland Mitigation Maps 1-9 (http://www.sqgw.org/townsend_wetland_maps.html)
H. Townsend Center Parking Area (http://www.sqgw.org/pdf/depot_st_plan_july_2020.pdf)

REGULATORY AND LEGAL DOCUMENTS

1. *Best Management Practices for Controlling Exposure to Soil during the Development of Rail Trails* - Massachusetts Department of Environmental Protection (DEP) (https://www.mass.gov/files/documents/2016/08/nw/railtrai_0.pdf)
2. Certificate of the Secretary of Energy and Environmental Affairs on the Environmental Notification Form (ENF) (http://www.sqgw.org/pdf/15876_mepa_Squannacook_River_Rail_Trail.pdf)
3. Natural Heritage & Endangered Species Program (NHESP) determination letter - Massachusetts Division of Fisheries and Wildlife (http://www.sqgw.org/pdf/03-13131_Townsend_Groton.pdf)
4. Order of Conditions - Townsend Conservation Commission - South Middlesex Registry of Deeds, Book 73032, page 574 (http://www.sqgw.org/pdf/Order_of_Conditions_Townsend.pdf)
5. Townsend Stormwater Pollution Prevention Plan (to be completed prior to construction)
6. MBTA lease #13509 (http://www.sqgw.org/pdf/MBTALease2015.pdf)

1. Introduction

See Plan A-Rail Trail Route for a map of rail trail in Townsend and Groton (http://www.sqgw.org/engineering_plans.html).

The Squannacook River Rail Trail (SRRT) is located in Groton and Townsend, Massachusetts on the former Greenville branch of the Boston and Maine Railroad. The corridor is leased for 99 years from the MBTA by Squannacook Greenways, Inc., a non-profit organization dedicated to the trail and its connectivity to the surrounding community.

The entire trail will be approximately 3.7 miles long. It will be ten feet wide, within a 20 foot wide corridor, and will be a multi-use stone dust (3/8" minus aggregate hard pack) rail trail. The corridor is relatively straight and has an elevation change from one end to the other of 32 feet.

Squannacook Greenways plans to build the rail trail over three construction years, completing approximately one-third of the trail each year. This document describes the first phase of construction, which will start at Depot Road in Townsend and terminate at Old Meetinghouse Road in Townsend, for a distance of approximately 1.1 miles.

Project design and engineering, environmental permitting, and tree and brush removal have already been completed. Erosion control wattles are already in place through the wetland areas.

The project addressed by this document will involve clearing stumps and remaining vegetative debris, restoring drainage, removing and properly disposing of rails and ties, grading the sub-base, applying a four-inch thick layer of aggregate over the ballast, and compacting and grading the new hard pack wearing surface. In addition, the contractor must replicate a wetland and construct a trailhead parking lot at Depot Street.

Steel rails will be removed as part of a separate project, as detailed in a separate document. However, we are asking contractors to provide pricing for rail removal in case this service is needed.

All work will must be done within the period of November 7 to March 15, to fulfill permitting requirements for the Natural Heritage & Endangered Species Program (NHESP).

Areas of special interest include the raised bed areas that experienced embankment erosion and culverts in need of repair and drainage restoration. Areas of special environmental concern include the trail's proximity to wetlands and the Squannacook River. The wetland mitigation (see Plan G) affects construction in many areas of the trail. There are also specific requirements for the staging area at Old Meetinghouse Road (see Plan E).

Six valuation maps covering the entire 3.7-mile length of the Squannacook River Rail Trail are available at the URL provided in the Table of Contents. These maps can also be found at the Massachusetts Registry of Deeds and are referenced from the MBTA's main deed, which may be found in the South Middlesex Registry of Deeds, Book 13156, Page 034, dated Feb 16, 1977.

This Construction Guidelines document is to be used to establish the required work, the order in which it should be performed, and the specifications required to construct the trail by construction contractors.

2. Regulatory and Legal Requirements

Regulatory and legal requirements for construction of the Squannacook River Rail Trail are addressed in several documents, which are listed in the Table of Contents. These documents are available on the Squannacook Greenways website at the URLs listed in the Table of Contents. Contractors are advised to download and understand these documents before bidding. **The selected contractor must be thoroughly familiar and comply with all of these documents**. In addition, the Orders of Conditions and Stormwater Plan are required to be kept on site at all times during construction.

Note that this project has been ruled by the Massachusetts Department of Labor to NOT be covered by the prevailing wage law.

2.1. Environmental Requirements

Because of its location in Estimated Habitat of Rare Wildlife, this rail trail project is regulated under the Massachusetts Endangered Species Act. All construction shall take place between the dates of November 7 and March 15 to avoid impacts to sensitive habitat, as stipulated under the Natural Heritage & Endangered Species Program (NHESP).

In addition, the project shall comply with Orders of Conditions issued by the Townsend Conservation Commission. Much of the construction work is within 100-foot wetland buffer zone or 200-foot riverfront area, requiring special measures to protect the resource areas. These areas have been professionally delineated and plans developed for placement of erosion control barriers.

Squannacook Greenways has cleared much of the brush and installed straw wattles. The contractor will not be responsible for installing or removing wattles. No construction activity shall occur outside of the erosion control barriers.

The project shall comply with Best Management Practices created by the Massachusetts Department of Environmental Protection (DEP) to manage construction risks associated with development of former railroad rights-of-way into rail trails. No soil shall be removed from the rail corridor and excavation shall be kept to a minimum to prevent exposure to potentially contaminated soil.

Note that Best Management Practices require that we “hire an independent environmental monitor or task existing staff to oversee the Construction Contractor.” This will be the sole responsibility of Squannacook Greenways and should not be included in this contract.

2.2. Accessibility Requirements

The specifications in this document for the rail corridor and parking areas adhere to the accessibility guidelines in the U.S. Forest Service Trail Accessibility Guidelines (FSTAG 2013) and the Massachusetts 521 CMR: Architectural Access Board CMR 23.00 Parking and Passenger Loading Area (2016).

3. Staging Areas

3.1. Objective

Two staging areas shall be created as part of this contract and used for construction:

- Depot Street (Townsend) – ~5,000 square feet of mostly grassy area near the intersection of Center and Depot Streets. The area is already level and partially clear of trees and brush. The contractor shall clear remaining vegetation and grade as needed for equipment access, material storage, and loading.
- Route 119 (Townsend) - Approximately one acre along Route 119 just east of Old Meetinghouse Road. Squannacook Greenways is currently in negotiation with the land owner for use of this property, which is easily accessed from the roadway and already cleared of trees and stumps. We will inform bidding contractors of status of negotiations.

Alternative staging area:

Should the Route 119 staging area be unavailable, the alternative staging area is ~5,000 square feet along the rail corridor on the east side of Old Meetinghouse Road in Townsend. The contractor shall clear the areas of trees and brush and grade the sites as needed for equipment access, material storage, and loading. Contractors are asked to submit a pricing for the alternative staging area.

See Plan E-Old Meetinghouse Staging Area (http://www.sqgw.org/engineering_plans.html).

3.2. Regulatory Requirements

3.2.1. Proper environmental safeguards (e.g. erosion control barriers installed by Squannacook Greenways) shall be in place throughout the construction and use of staging areas.

3.2.2. No soil shall be removed from the rail corridor.

3.2.3. Any excavation shall be kept to a minimum to prevent exposure to potentially contaminated soil on the rail corridor.

3.2.4. Erosion control barriers (wattles) shall be preserved during construction and no construction activity shall be done outside of the barriers.

3.3. Construction Specifications

3.3.1. The contractor shall establish a project plan and obtain approval from Squannacook Greenways.

3.3.2. Access to the trail is via roadways and staging areas. No other access shall be used without permission of Squannacook Greenways.

3.3.3. All equipment traffic shall be on the rail bed and there shall be no heavy equipment traffic or other disturbance on the surrounding lands.

3.3.4. The staging areas at Old Meetinghouse Road is accessed through a wetland buffer zone. Every effort shall be made to clear the minimum amount of trees and brush. This staging area is to receive first priority for removal of stockpiled materials.

3.3.5. The area surrounding the Depot Road staging area shall be preserved to the extent possible, including vegetation and railroad artifacts, to facilitate conversion to a rail trail parking lot and kiosk area after construction. Retain 100 feet of siding ties and rails for historical reference.

3.3.6. Ties are to be staged on and under 10-ml polyethylene sheeting, properly secured, at staging areas.

3.3.7. Immediately following construction, all staging materials shall be removed and the areas restored to a clean condition. The contractor shall remove and properly dispose of the sheeting used to cover ties general cleanup of tie staging area.

3.3.8. The contractor shall remove and properly dispose of all debris, rail spikes, broken ties, etc. associated with this project.

3.3.9. Staging areas shall be graded and reseeded with native grasses following construction.

4. Removal of Stumps and Vegetative Debris

4.1. Objective

See Plan B-Typical Cross-Section (http://www.sqgw.org/engineering_plans.html).

A professional tree clearing service was hired to remove trees and vegetation from the entire rail corridor during the 2019-2020 construction season. Subsequently, volunteers cleared much of the woody debris, brush, small trees, and other obstructions from the existing corridor to open a walking path. The construction contractor shall remove remaining stumps, brush, and woody debris as necessary.

4.2. Regulatory Requirements

4.2.1. Proper environmental safeguards (e.g. erosion control barriers installed by Squannacook Greenways) must be in place throughout tree and brush removal.

4.2.2. No soil shall be removed from the rail corridor.

4.2.3. Any excavation shall be kept to a minimum to prevent exposure to potentially contaminated soil on the rail corridor.

4.3. Specifications

4.3.1. All woody debris, brush, and other vegetation shall be cut and removed from the area within 10 feet from the existing rail centerline to create a 20 foot wide corridor.

4.3.2. An overhead clearance of 11 feet shall be established for construction and emergency vehicles.

4.4. Recommended procedures

4.4.1. Work crews should identify invasive plants such as Japanese knotweed, bittersweet, burning bush, and multi-flora rose. These plants shall not be removed from the corridor but should be piled off the trail and left to decompose.

4.4.2. All remaining brush and other organic material remaining within 10 feet from the existing rail centerline shall be removed to create a 20-foot wide corridor.

4.4.3. An overhead clearance of 11 feet shall be established for construction and emergency vehicles.

4.4.4. Stumps within the 10 foot trail shall be removed and holes backfilled. If removal cannot be accomplished without causing significant soil disturbance, the stumps shall be ground in place.

4.4.5. Stumps outside the 10 foot trail (more than five feet from the centerline of the rails) may remain in place if trimmed flush to the ground.

4.4.6. Vehicles shall never leave the corridor onto private property without written consent of the owner.

4.4.7. Wood chips or comparable material shall be used to stabilize erosion areas with little or no top soil, such as the south embankment between Sterilite and the self-storage facility.

4.4.8. Large stones should be moved to the road crossings for use as temporary bollards to block side trails. The stones should be placed an appropriate distance apart to prevent access by all-terrain vehicles.

4.4.9. Large stones located near Depot Road in Townsend can be used as best suited to stabilize the eroded embankment between Sterilite and the self-storage facility.

5. Tie Removal

5.1. Objective

The railroad ties must be removed before the rail bed can be prepared for surfacing. The contractor is responsible for removing the ties from the corridor, moving them to the staging areas, and delivering them to an approved facility. The contractor is also responsible for removing and properly managing all debris associated with tie removal, including debris.

The ties shall be transported to an EPA-approved disposal facility (e.g., co-generation plant for incineration). The contractor is responsible for identifying and negotiating with facility and is responsible for disposal costs.

Steel rails will be removed as part of a separate project. However, we are asking contractors to provide pricing for rail removal in case this service is needed. Rail removal service would include removing all rails, spikes, connector plates, and rail debris from the corridor and moving them to the staging areas. The best 100 feet of the siding near Depot Street in Townsend shall remain in place for historical value.

This will also include transporting the rails to a salvage facility. Contractor is responsible for identifying and negotiating with facility. Rails become property of contractor. To maximize the monetary value of the steel, the contractor should explore at least three buyers, such as Jersey Shore Steel in New Jersey.

5.2. Regulatory Requirements

5.2.1. Proper environmental safeguards (e.g. erosion control barriers installed by Squannacook Greenways) shall be in place throughout the rail and tie removal.

5.2.2. No soil shall be removed from the rail corridor.

5.2.3. Any excavation shall be kept to a minimum to prevent exposure to potentially contaminated soil on the rail corridor.

5.3. Construction Specifications

5.3.1. The contractor shall establish a project plan and obtain approval from Squannacook Greenways.

5.3.2. Access points for equipment, material storage, and loading shall be limited to the staging areas defined in this specification. If other access from private property is necessary, written permission shall be obtained from the owner and copies supplied to the Squannacook Greenways.

5.3.3. Ties in or under pavement at road crossings shall be left in place.

5.3.4. All ties shall be removed from the corridor, including partial ties and sections, except were the steel rail has been left in place as previously noted.

5.3.5. Ties shall have all steel spikes and plates removed to avoid extra fees.

5.3.6. Tie material shall be bundled and stored on site for as short a period as deemed reasonable. No ties removed from the bed shall remain on the corridor after March 15.

5.3.7. All bundled ties shall be transported to an EPA-approved facility (such as a biomass co-generation plant for incineration).

5.3.8. The contractor shall remove and properly dispose of all debris, broken ties, etc. associated with this project.

6. Wetland Replication

6.1. Objective

See Plan D-Wetland Mitigation (http://www.sqgw.org/townsend_wetland_maps.html).

A section of rail corridor located southeast of the Unitil substation in Townsend has ledge on both sides and poor drainage. This has been determined by the Townsend Conservation Commission to be a wetland requiring remediation before the trail surface is installed and graded. The mitigation plan involves replicating approximately 2,000 square feet of wetland by excavating soil and replanting with New England wetland plants, as shown in the plan.

The area to be excavated is adjacent to but not within the rail corridor. The contract shall excavate the area to meet the specifications and grades shown the plan Topsoil shall be stripped and retained for re-use. The excavated fill will be used as needed on the trail construction. If excess excavated fill exists, it shall become property of the contractor.

See the Order of Conditions from the Townsend Conservation Commission for additional specifications.

7. Corridor Remediation

7.1. Objective

Several locations along the rail corridor require repairs to riverbank, culverts, and erosion damage. See the following plans:

Plan C-Slope Stabilization
(http://www.sqgw.org/engineering_plans.html)

Plan F-Valuation Maps (for location of culverts)
(http://www.sqgw.org/townsend_wetland_maps.html)

7.2. Regulatory Requirements

7.2.1. Proper environmental safeguards (e.g. erosion control barriers installed by Squannacook Greenways) shall be in place throughout the corridor repairs.

7.2.2. No soil shall be removed from the rail corridor.

7.2.3. Any excavation shall be kept to a minimum to prevent exposure to potentially contaminated soil on the rail corridor.

7.3. Construction Specifications

7.3.1. The contractor shall establish a project plan and obtain approval from Squannacook Greenways.

7.3.2. Access points for equipment, material stock piles, and loading shall be limited to the staging areas defined in this specification.

7.4. Bank Restorations

7.4.1. In areas where erosion or other causes have reduced the ballast, additional crushed stone topped with four inches of processed gravel shall be added to restore the original grade.

Figure 1: Eroded sub base between Sterilite and self-storage facility needs added ballast

7.4.2. The south embankment between Sterilite and the self-storage facility in Townsend (Figure 1) has experienced considerable erosion and additional crushed stone is required to restore proper grade. **See Plan C-Slope Stabilization.**

7.5. Culvert Repairs

7.5.1. Culvert No. 45.23, located between Old Meeting House Road and Sterilite is a 12 inch clay pipe that is not original to the rail bed and should be removed.

7.5.2. A section of stone at the south side of culvert No. 53.03, just west of Old Meeting House Road, has broken and fallen into the culvert. The broken stone should be reset or removed.

8. Sub Base Preparation

8.1. Objective

See Plan B-Typical Cross-Section (http://www.sqgw.org/engineering_plans.html).

Sub base preparation involves removing all organic material on the trail, restoring existing drainage, and constructing new drainage where required. The original rail road ballast shall then be graded at least 10 feet wide and compacted for use and in preparation for installation of the hard-pack stone-dust aggregate surface.

8.2. Regulatory Requirements

8.2.1. Proper environmental safeguards (e.g. erosion control barriers installed by Squannacook Greenways) shall be in place throughout for the duration of the sub base preparation.

8.2.2. No soil shall be removed from the rail corridor.

8.2.3. Any excavation shall be kept to a minimum to prevent exposure to potentially contaminated soil on the rail corridor.

8.3. Accessibility Specifications

The resultant trail shall meet the following U.S. Forest Service Trail Accessibility Guidelines:

8.3.1. Maximum running slope of 5% with no segment over 12%.

8.3.2. Maximum cross-slope of 5%.

8.3.3. No obstacles over two inches high.

8.3.4. No objects (signs, trees, etc.) protruding more than 4 inches into the trail within the 10 foot trail width.

8.4. Construction Specifications

8.4.1. The contractor shall establish a project plan and obtain approval from Squannacook Greenways.

8.4.2. Access points for equipment, material storage, and loading shall be limited to the staging areas defined in this specification.

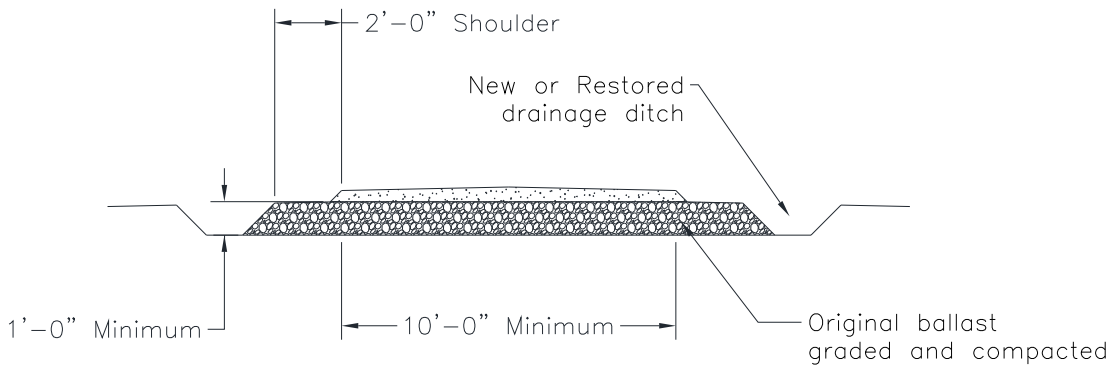

Figure 2: Drainage and sub base

8.5. Drainage

8.5.1. All sections of trail that are level or below the immediately surrounding grade shall have drainage ditches cleaned and restored.

8.5.2. Drainage ditches shall be approximately 12 inches below the finish grade of the compacted ballast.

8.5.3. Existing drainage ditches vary significantly regarding shoulder width. The two-foot minimum shoulder width may need to be reduced to one foot in some below-grade areas due to available space within ledge cutouts.

8.5.4. Drainage is not required on raised bed sections of the corridor where the bed is at least 12 inches above the immediately surrounding grade.

8.5.5. Organic material from drainage restoration shall be used to restore areas where topsoil has been eroded or scattered in areas where it may beneficial.

8.5.6. Areas where standing water is often encountered:

8.5.6.1. The deeply undercut area in the center of the section between Old Meetinghouse Road and Sterilite does not drain well and is often wet on both sides. Increasing the drainage depth to 18 inches is required in these areas. Adding crushed stone may be required to raise the sub base in this area to prevent future drainage issues. **See the *Wetland Replication* section in this document for additional specifications.**

8.6. Grading and Compaction of the Sub Base

8.6.1. The original ballast shall be graded level to a width of 10 feet.

8.6.2. The graded ballast shall follow the original grade of the existing rail.

8.6.3. The graded ballast shall be graded so that it is centered on the original placement of the rail bed except as specified otherwise.

8.6.3.1. A section of the rail corridor behind Sterilite may be shifted a few feet from the centerline.

8.6.3.2. Retain 100 feet of siding ties and rails near the Depot Street parking lot for historical reference.

8.6.4. Ballast shall not be pushed into drainage ditches when grading.

8.6.5. The graded ballast shall be compacted with a 12 ton minimum vibratory roller except where noted otherwise

8.6.5.1. Do not vibrate directly above culverts.

8.6.6. The minimum depth of good quality original ballast and/or new crushed stone shall be at least six inches.

9. Aggregate Hard Pack Surface Installation

9.1. Objective

See Plan B-Typical Cross-Section (http://www.sqgw.org/engineering_plans.html).

A new trail surface of 3/8-inch minus aggregate hard pack is to be constructed on top of the repaired, compacted, and graded sub base. The hard pack trail shall be 10 feet wide, with a minimum thickness of four inches, and a crown to shed water.

9.2. Regulatory Requirements

9.2.1. Proper environmental safeguards (e.g. erosion control barriers installed by Squannacook Greenways) must be in place throughout the surface installation.

9.2.2. No soil shall be removed from the rail corridor.

9.2.3. Any excavation shall be kept to a minimum to prevent exposure to potentially contaminated soil on the rail corridor.

9.3. Accessibility Specifications

The resultant trail shall meet the following U.S. Forest Service Trail Accessibility Guidelines:

9.3.1. Maximum running slope of 5% with no segment over 12%.

9.3.2. Maximum cross-slope of 5%.

9.3.3. No obstacles over two inches high.

9.3.4. No objects (signs, trees, etc.) protruding more than 4 inches into the trail.

9.4. Aggregate Specifications

The 3/8-inch minus aggregate hard pack shall meet the following specifications:

9.4.1. Shall consist of hard, durable particles and fragments of crushed stone and gravel.

9.4.2. Shall be free of (less than 0.5 %) organic material (wood, top soil, etc.).

9.4.3. Shall be free of (less than 0.5 %) lumps and/or balls of clay.

9.4.4. The hard pack shall be tested in accordance with ASTM D4318 and have a plasticity index limit of 6 and a liquid limit of 25

9.4.5. Gradation is achieved by crushing, screening and then blending as necessary. The material shall meet the following screen analysis by weight:

Sieve Designation	Percent Passing
½”	100%
3/8”	90-100%
No. 4	60-81%

No. 8	44-60%
No. 40	20-33%
No. 200	10-16%

9.5. Installation Specifications

9.5.1. The contractor shall establish a project plan and obtain approval from Squannacook Greenways.

9.5.2. Access points for equipment, material stock piles, and loading shall be limited to the staging areas defined in this specification.

9.5.3. Proper environmental safeguards (e.g. erosion control barriers installed by Squannacook Greenways) shall be established or existing safeguards inspected before work begins.

9.5.4. The hard pack material shall be delivered directly to the site via the previously compacted ballast trail. There shall be no vehicle traffic off of the trail.

9.5.5. The hard pack shall be spread centered on the previously graded and compacted trail to form a 10-foot wide path approximately six inches deep. Application may be by drop spreading or by use of an asphalt spreader for best results.

9.5.6. The hard pack shall be graded and compacted to have a center crown and have a slope of at least ¼ inch per foot and not exceed 1/2 inch per foot (see Figure 3).

9.5.7. The hard pack shall be compacted with a 12 ton minimum vibratory roller except as noted.

9.5.7.1. Do not vibrate directly over culverts.

9.5.8. The compacted hard pack depth shall be at least four inches at the edges and 5-1/4 inches at the center.

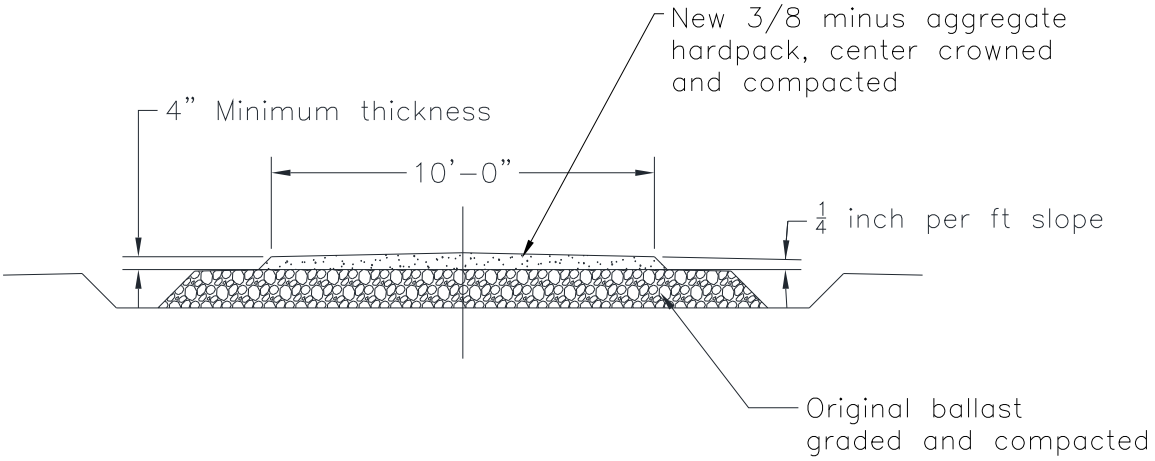

Figure 3: Hard pack installation

10. Townsend Center Parking Area

10.1. Objective

See parking area plan (http://www.sqgw.org/pdf/depot_st_plan_july_2020.pdf).

When no longer needed for construction, the staging area near the intersection of Center and Depot Streets in Townsend center will be converted to a trailhead parking area for rail trail users. This area is approximately 4,919 square feet (457 m²) and is relatively level. It will require minimal development to accommodate 12 vehicles, including one space accessible for a handicap van.

This area is not within a wetland resource area so does not require erosion control barriers. However, it has historically been used as a railroad depot, so every effort must be made to avoid excavating potentially contaminated soil.

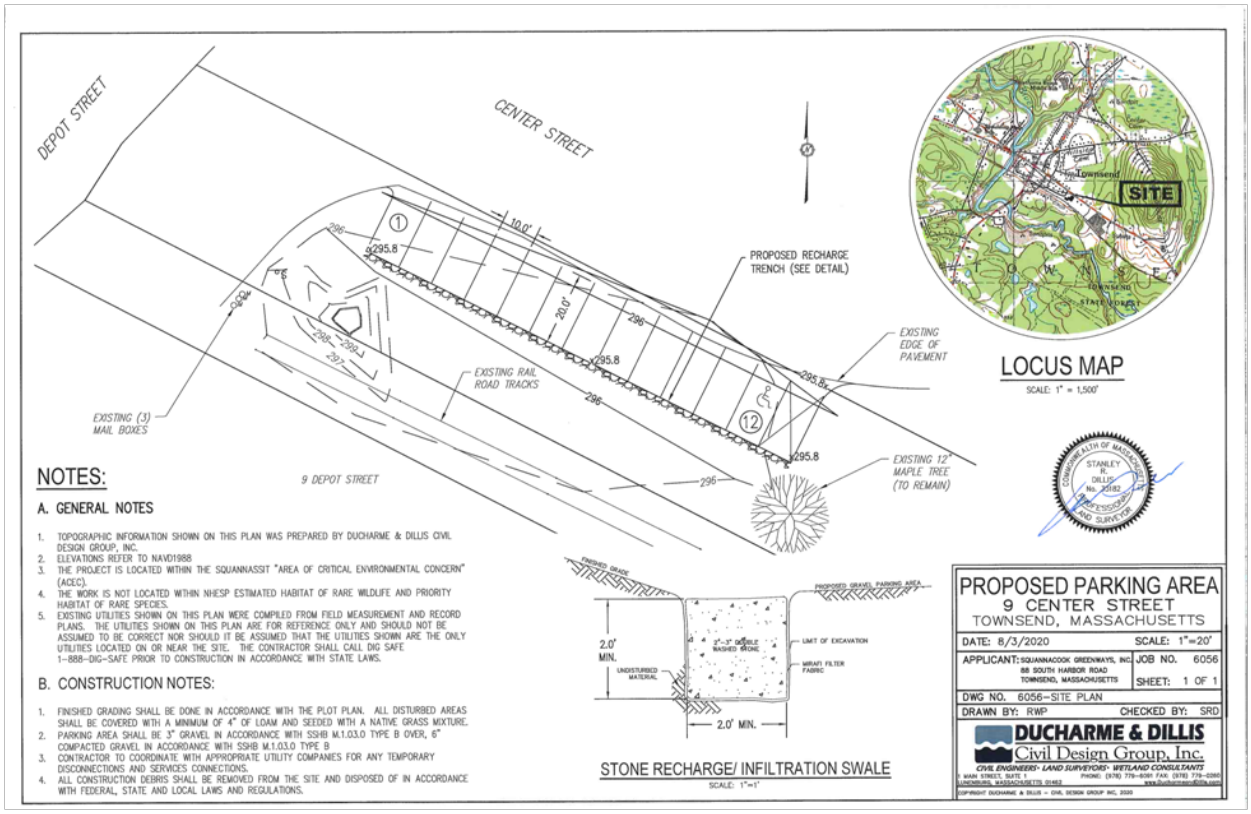

Figure 4: Parking area in Townsend near the intersection of Center and Depot Streets

10.2. Regulatory Requirements

10.2.1. No soil shall be removed from the rail corridor.

10.2.2. Any excavation shall be kept to a minimum to prevent exposure to potentially contaminated soil on the rail corridor.

10.3. Accessibility Specifications

10.3.1. The parking lot surface shall be hard-packed and smooth, with slope not to exceed 2%.

10.3.2. A van-accessible space shall be provided near the shortest route of travel to the rail trail, with at least an 8 foot wide adjacent aisle.

10.3.3. The walkway between the accessible parking space and the rail trail shall be at least 36" wide with no change in level over one-half inch.

10.4. Construction Specifications

10.4.1. The parking area shall be optimized by clearing brush, leveling, and upgrading to a hard pack surface.

10.4.2. Provisions shall be made to encourage trail users to move between the rail trail and the parking lot using one or more designated pathways.

10.4.3. A level area near the parking lot shall be selected and optimized for development as a trailhead kiosk area. The area around the kiosk shall be sufficiently smooth and level for future installation of brick pavers.

11. Miscellaneous Reference Data

All dimensions, numbers, weights, values, etc. listed below are for the entire 3.7-mile rail corridor. These are estimates provided by Squannacook Greenways, Inc. for the convenience of the contractor. Squannacook Greenways does not warrantee that these values are accurate. The contractor is responsible for verifying and establishing true values and should not rely on these estimates.

11.1. Miscellaneous Reference Data

11.1.1. The length of the entire trail is 3.7 miles.

11.1.2. Typical width of the leased MBTA corridor is approximately 80 feet, with some exceptions in the Townsend Harbor Pond area, near Sterilite, and near Depot Street. Most of the corridor will not be disturbed by construction.

11.2. Steel Rail

11.2.1. The steel rail weighs up to 85 lbs. per yard

11.2.2. The rail lengths are approximately 30 feet.

11.3. Rail Road Ties

11.3.1. The ties are approximately 6 inches x 8 inches x 8-1/2 feet long.

11.3.2. The ties weigh up to 200 lbs. each.

11.3.3. The ties are spaced approximately 19.5inches apart.

11.3.4. The estimated number of ties on the 3.7 mile corridor is approximately 12,000.

11.3.5. The maximum total weight of ties to dispose of is 1,200 tons.

11.3.6. It is assumed the ties have no resale value.

11.4. 3/8-Inch Minus Aggregate Hard Pack

11.4.1. Hard pack has an estimated compacted density of 150 lbs./cu ft.

11.4.2. The 3.7 mile trail is estimated to require 1,526 tons of hard pack per mile.

11.4.3. The total hard pack required is estimated at 5,647 tons.